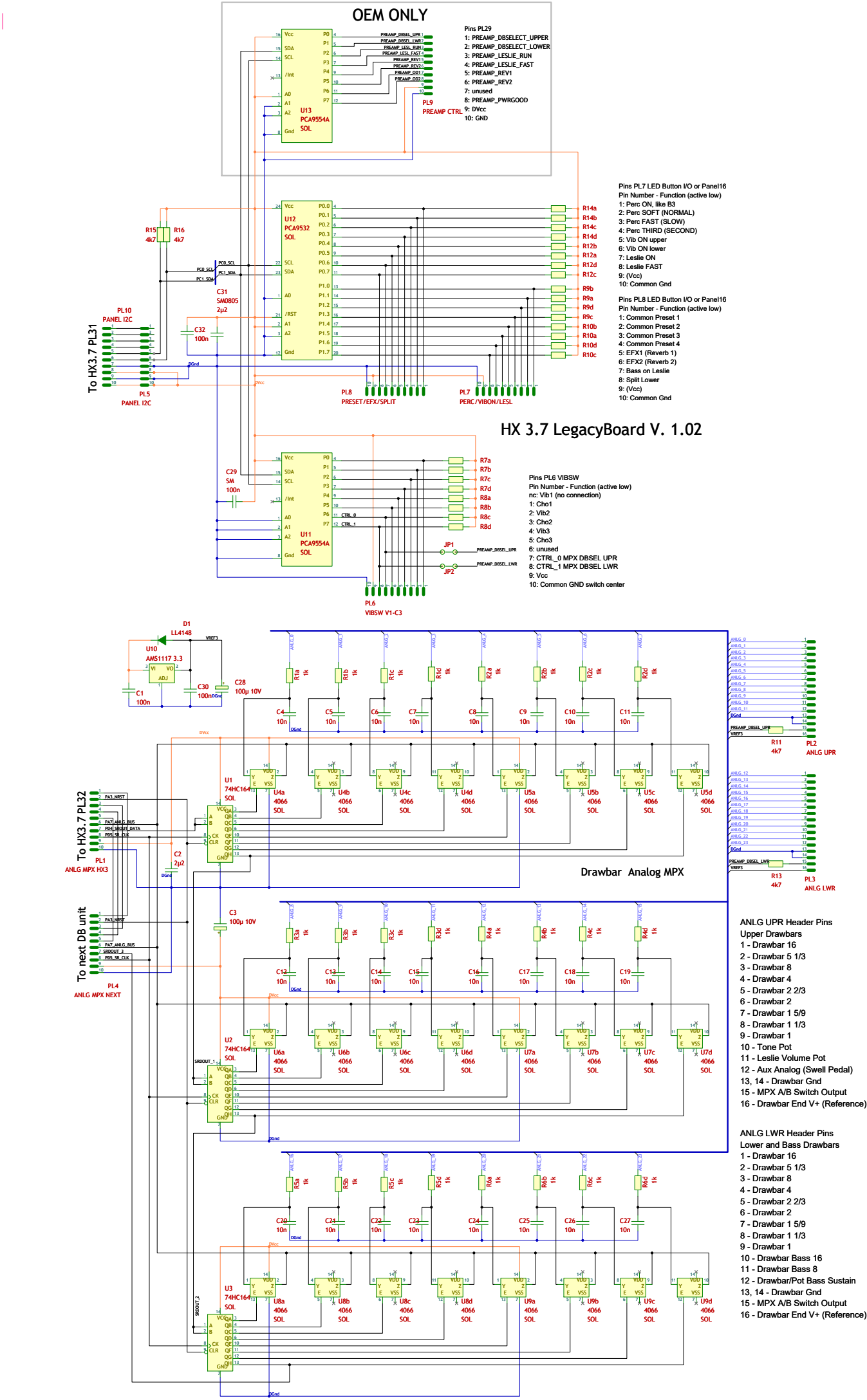
OEM ONLY
U13
PCA9554A
SOL
PL9
PREAMP CTRL
Pins PL29
1: PREAMP_DBSELECT_UPPER
2: PREAMP_DBSELECT_LOWER
3: PREAMP_LESLIE_RUN
4: PREAMP_LESLIE_FAST
5: PREAMP_REV1
6: PREAMP_REV2
7: unused
8: PREAMP_PWRGOOD
9: DVcc
10: GND
U12
PCA9532
SOL
R15
4k7
R16
4k7
C31
SM0805
2µ2
C32
100n
PL10
PANEL I2C
To HX3.7 PL31
PL5
PANEL I2C
PL8
PRESET/EFX/SPLIT
PL7
PERC/VIBON/LESL
Pins PL7 LED Button I/O or Panel16
Pin Number - Function (active low)
1: Perc ON, like B3
2: Perc SOFT (NORMAL)
3: Perc FAST (SLOW)
4: Perc THIRD (SECOND)
5: Vib ON upper
6: Vib ON lower
7: Leslie ON
8: Leslie FAST
9: (Vcc)
10: Common Gnd
Pins PL8 LED Button I/O or Panel16
Pin Number - Function (active low)
1: Common Preset 1
2: Common Preset 2
3: Common Preset 3
4: Common Preset 4
5: EFX1 (Reverb 1)
6: EFX2 (Reverb 2)
7: Bass on Leslie
8: Split Lower
9: (Vcc)
10: Common Gnd
HX 3.7 LegacyBoard V. 1.02
U11
PCA9554A
SOL
C29
SM
100n
JP1
JP2
PL6
VIBSW V1-C3
Pins PL6 VIBSW
Pin Number - Function (active low)
nc: Vib1 (no connection)
1: Cho1
2: Vib2
3: Cho2
4: Vib3
5: Cho3
6: unused
7: CTRL_0 MPX DBSEL UPR
8: CTRL_1 MPX DBSEL LWR
9: Vcc
10: Common GND switch center
D1
LL4148
U10
AMS1117 3.3
C1
100n
C30
100n
C28
100µ 10V
U1
74HC164
SOL
U4a 4066 SOL
U4b 4066 SOL
U4c 4066 SOL
U4d 4066 SOL
U5a 4066 SOL
U5b 4066 SOL
U5c 4066 SOL
U5d 4066 SOL
R11
4k7
PL2
ANLG UPR
R13
4k7
PL3
ANLG LWR
To HX3.7 PL32
PL1
ANLG MPX HX3
C2
2µ2
Drawbar Analog MPX
To next DB unit
PL4
ANLG MPX NEXT
C3
100µ 10V
U2
74HC164
SOL
U6a 4066 SOL
U6b 4066 SOL
U6c 4066 SOL
U6d 4066 SOL
U7a 4066 SOL
U7b 4066 SOL
U7c 4066 SOL
U7d 4066 SOL
ANLG UPR Header Pins
Upper Drawbars
1 - Drawbar 16
2 - Drawbar 5 1/3
3 - Drawbar 8
4 - Drawbar 4
5 - Drawbar 2 2/3
6 - Drawbar 2
7 - Drawbar 1 5/9
8 - Drawbar 1 1/3
9 - Drawbar 1
10 - Tone Pot
11 - Leslie Volume Pot
12 - Aux Analog (Swell Pedal)
13, 14 - Drawbar Gnd
15 - MPX A/B Switch Output
16 - Drawbar End V+ (Reference)
U3
74HC164
SOL
U8a 4066 SOL
U8b 4066 SOL
U8c 4066 SOL
U8d 4066 SOL
U9a 4066 SOL
U9b 4066 SOL
U9c 4066 SOL
U9d 4066 SOL
ANLG LWR Header Pins
Lower and Bass Drawbars
1 - Drawbar 16
2 - Drawbar 5 1/3
3 - Drawbar 8
4 - Drawbar 4
5 - Drawbar 2 2/3
6 - Drawbar 2
7 - Drawbar 1 5/9
8 - Drawbar 1 1/3
9 - Drawbar 1
10 - Drawbar Bass 16
11 - Drawbar Bass 8
12 - Drawbar/Pot Bass Sustain
13, 14 - Drawbar Gnd
15 - MPX A/B Switch Output
16 - Drawbar End V+ (Reference)